Bore Clamps

Flange type, without centring function, double acting, for bore diameter 7.8–17.7 mm, max.operating pressure 250 bar

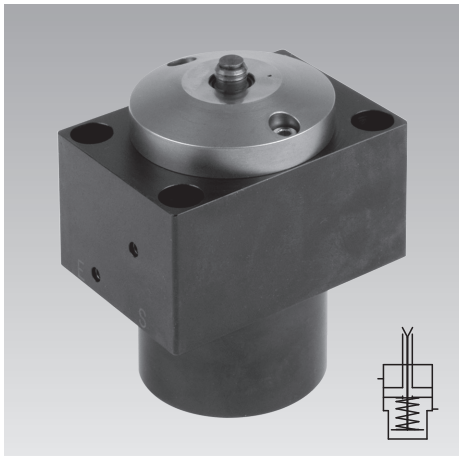

Advantages

- Axial clamping in simple bore holes
- 5-sided machining possible
- Expand clamping bushing with spring force
- Hold workpiece without hydraulic pressure
- Clamp workpiece with adjustable hydraulics
- Hardened workpiece support
- Pneumatic seat check
- Connection for positive air pressure protection
- Standard FKM seals
- 2 sizes available

Function

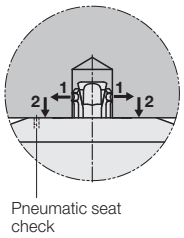

1 Expand clamping bushing with spring force
Hold workpiece
Safety in case of pressure drop

2 Clamp workpiece with hydraulics
Adjustable clamping force

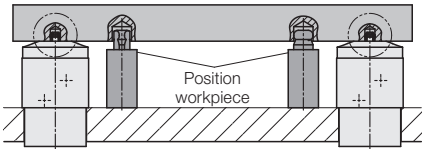

Application

The bore clamps are particularly suited for clamping of workpieces with smooth bore holes from diameter 7.8 to 17.7 mm in the support surface.

The required form-fit in the bore hole is obtained by the special profile of the hardened clamping bushings with penetrating points in the bore hole wall. Hardened materials cannot be clamped with these elements.

The workpiece is put directly onto the bore clamp and will not be deformed during clamping.

Since clamping is effected within the bore, the remaining surfaces are free for machining on 5 sides (see application example).

The size of the possible machining forces is certainly limited using this type of clamping, especially crosswise to the clamping surface.
Except the static friction force between the workpiece and the support, the bore clamp cannot compensate any side loads. Additional stops or positioning elements can help in such applications.

Workpiece sections that are subject to vibrations and deformations during machining, have to be additionally supported or clamped in a flexible (floating) position.

Functional description

See page 4

Description

The bore clamp is a double-acting pull-type cylinder. An exchangeable clamping bushing is fixed to the piston.
The four segments of the clamping bushing are radially expanded with spring force by a pyramid-shaped clamping bolt. Thus the expansion force is always the same and independent of the hydraulic clamping pressure.
The workpiece is also held without hydraulics by means of the expanded clamping bushing.
Both pull-down of the workpiece and unclamping of the clamping bushing are hydraulically controlled.
Connecting the positive air pressure protection, the clamping bushing is protected against swarf and coolants.
In the hardened support surface for the workpiece there is a bore hole for the pneumatic seat check.

Connecting possibilities

Drilled channels

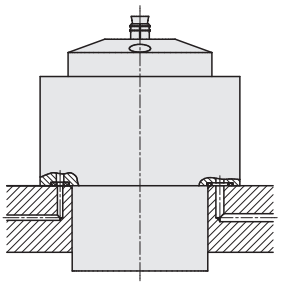

Important notes

The bore clamp has no centring function.
The clamping bushing has to be protected against too high side loads during insertion or machining by suitable stops or centring bolts.
The required positioning precision is ± 0.2 mm.
The required penetration depth of the toothing depends on the strength of the material for the form-fit toothing with the workpiece. Therefore hardened or coated workpieces cannot be used.
The tapering of the bore hole should not exceed 3°.

In case of doubt we recommend a clamping test.
Clean the support surface and blast clean the clamping bushing before every clamping cycle.
If swarf fall into an open clamping bore, blast air must be continuously switched on.
Clamping bushings and wiper should be exchanged after 100,000 operations.
Part numbers for complete clamping sets:
see chart on page 3

Application example

Machining of a plate from 5 sides on an indexing bridge

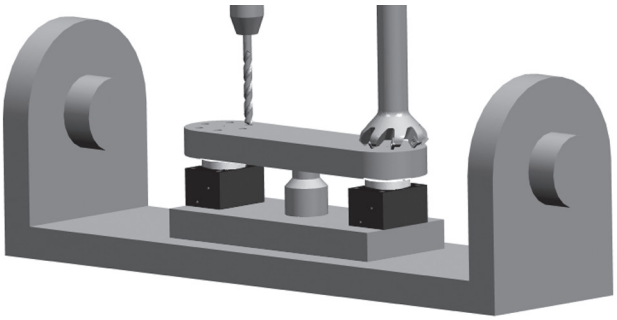

Operating conditions, tolerances and other data, see data sheet A 0.100.

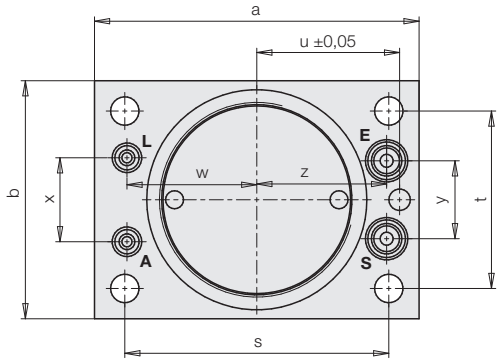

S = Clamping (pull down effect)
E = Unclamping (release of pull down effect and clamping bushing)
A = Seat control
L = Positive air pressure protection

Functional description see page 4.

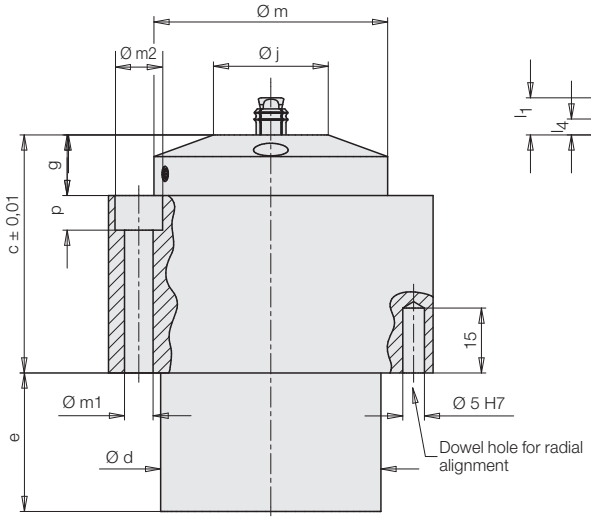

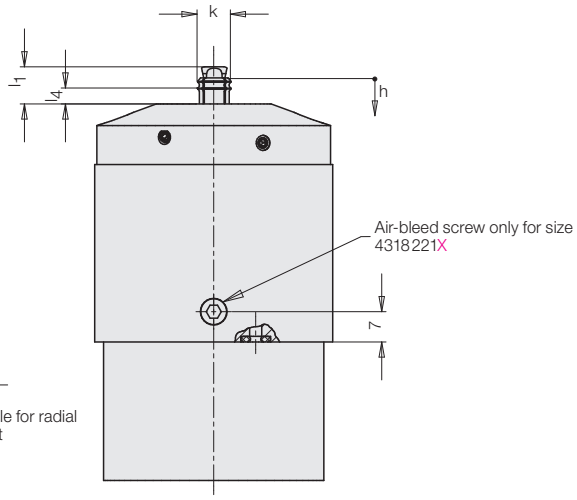

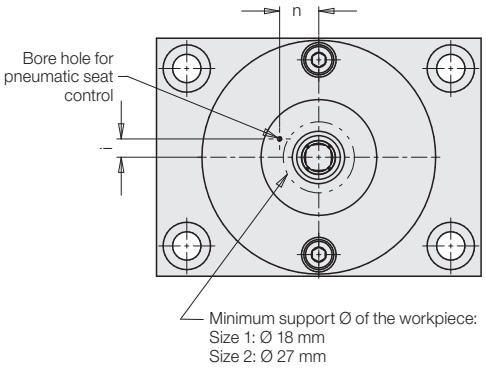

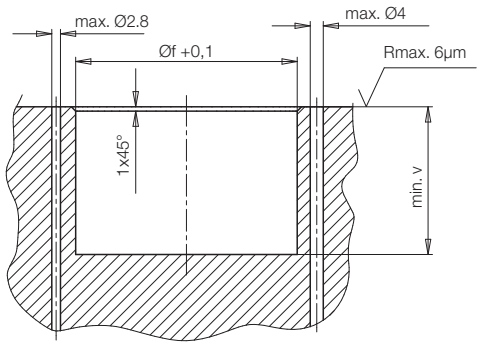

Demands on the bore hole in the workpiece

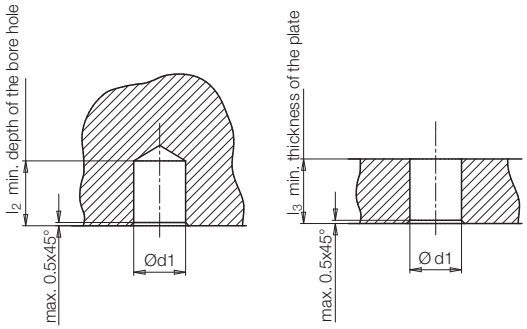

Adjusting Ø of the clamping bushing: k = d1 –0.2 mm

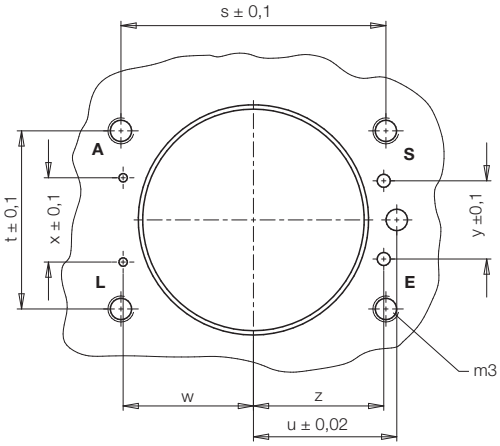

Operating conditions, tolerances and other data, see data sheet A 0.100.

Technical data

			Size 1	Size 2
Part no. (**X** = Identification letter bore Ø)			**4318121X**	**4318221X**
Expansion force , radial		[kN]	approx. 9	approx. 14
Pull-down force	at 100 bar	[kN]	2	3.9
	at 250 bar	[kN]	5.1	9.8
Clamping bushing, unclamping		[bar]	min. 100**	min. 100**
Max. oil volume	Clamping	[cm³]	0.5	1
	Unclamping	[cm³]	10	25
Max. flow rate		[cm³/s]	25	50
a		[mm]	75	85
b		[mm]	55	63
c ±0.01		[mm]	55	61
d		[mm]	50.9	57.9
e		[mm]	32	50
f		[mm]	51	58
g		[mm]	14	16
h max. pull-down stroke		[mm]	2	2
i		[mm]	4.2	5.9
j		[mm]	26.5	38.3
k Adjusting Ø of the clamping bushing		[mm]	d1 –0.2	d1 –0.2
l_1 max. height (unclamped)		[mm]	10	13
l_2 min. depth of the bore hole		[mm]	10	13
l_3 min. thickness of the plate		[mm]	9	12
l_4		[mm]	3.2	3.7
m		[mm]	54	63
m1		[mm]	6.6	8.5
m2		[mm]	11	15
m3		[mm]	M6	M8
n		[mm]	9	12.7
p		[mm]	8	9
s		[mm]	61	66
t		[mm]	41	46
u		[mm]	33	36
v		[mm]	34	52
w		[mm]	30	32
x		[mm]	19.4	23
y		[mm]	18	24
z		[mm]	30	33.5
Weight		[kg]	1.8	2.9

Part numbers for spare O-ring

2 x O-ring for port **A/L**	[mm]	Ø 3.68x1.78	Ø 3.68x1.78
NBR		**3000876**	**3000876**
FKM		**3000274**	**3000274**
2 x O-ring for port **E/S**		Ø 7x1.5	Ø 7x1.5
NBR		**3000342**	**3000342**
FKM		**3001077**	**3001077**

Pull-down force

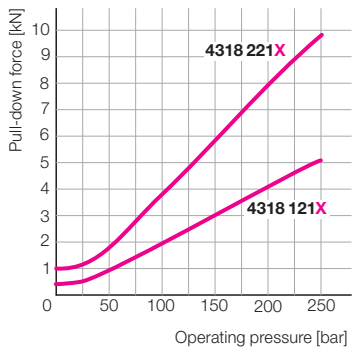

* Consider the tolerance of the bore hole
** For operating pressures < 100 bar please contact us.

Bore hole Ø and part numbers

Size 1

Bore Ø* d1 in mm	Part no.
7.8 - 8.2	**4318121 A**
8.3 - 9.2	**4318121 B**
9.3 - 9.7	**4318121 C**
9.8 - 10.2	**4318121 D**
10.3 - 11.2	**4318121 E**

Size 2

Bore Ø* d1 in mm	Part no.
11.3 - 11.7	**4318221 F**
11.8 - 12.7	**4318221 G**
12.8 - 13.7	**4318221 H**
13.8 - 14.7	**4318221 K**
14.8 - 15.7	**4318221 L**
15.8 - 16.7	**4318221 M**
16.8 - 17.7	**4318221 N**

Article available on request

Spare clamping sets

The clamping sets contain all required components to replace the clamping bushings. Every clamping set consists of clamping bushing and wiper. Mounting or dismounting can be made on your own as per operating instructions.

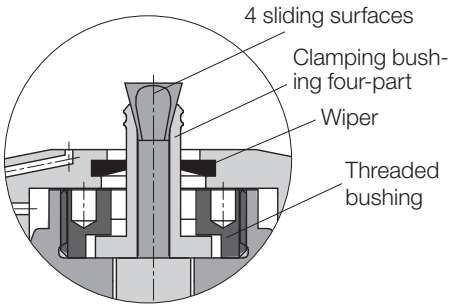

Size 1

Bore Ø* d1 in mm	Clamping set Part no.
7.8 - 8.2	**0431704 A**
8.3 - 9.2	**0431704 B**
9.3 - 9.7	**0431704 C**
9.8 - 10.2	**0431704 D**
10.3 - 11.2	**0431704 E**
Screw tool for threaded bushing	**2010911**

Size 2

Bore Ø* d1 in mm	Clamping set Part no.
11.3 - 11.7	**0431703 F**
11.8 - 12.7	**0431703 G**
12.8 - 13.7	**0431703 H**
13.8 - 14.7	**0431703 K**
14.8 - 15.7	**0431703 L**
15.8 - 16.7	**0431703 M**
16.8 - 17.7	**0431703 N**
Screw tool for threaded bushing	**2010912**

Operating conditions, tolerances and other data, see data sheet A 0.100.

Hydraulic connection

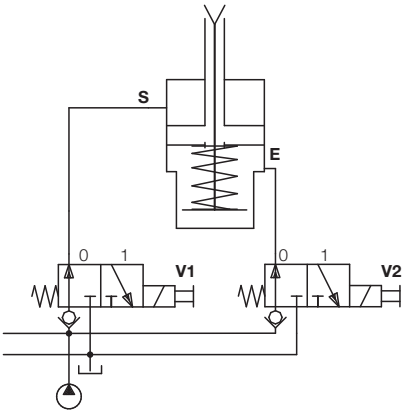

Function sequence

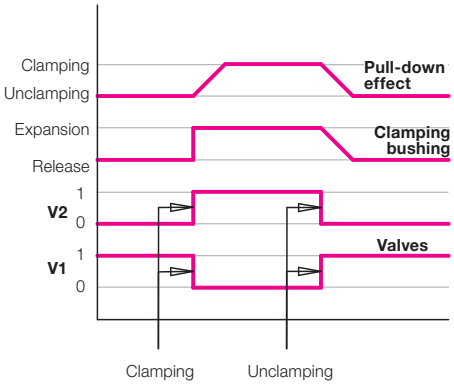

Clamping bushing only expansion

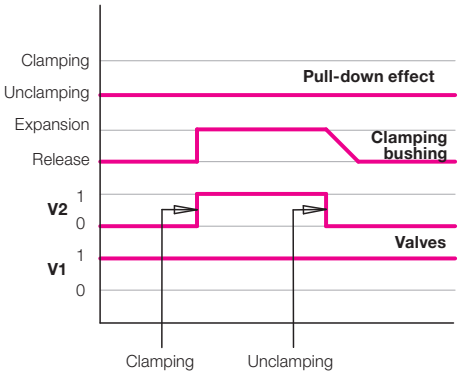

Workpiece clamping

1. Put the workpiece onto the hardened support surfaces and position by external stops or pins, if required.
2. Start the clamping process by switching the valves.
3. With pressure relief of the unclamping port the clamping bushings will be radially expanded very quickly. According to the material, the toothing penetrates more or less deeply into the bore hole wall and a form fit will be obtained.
4. In case of pressure increase at the clamping port, the hydraulic piston pulls the expanded clamping bushing and thereby also the workpiece onto the support surface.

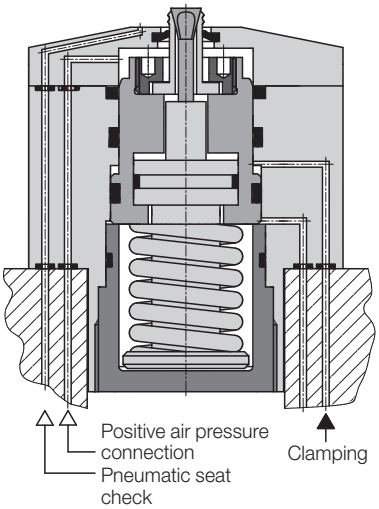

What happens in case of pressure drop of the clamping pressure?

In case of pressure drop the workpieces is no longer pulled onto the hardened support surface. The radial expansion of the clamping jaws and thereby the form fit with the workpiece are maintained by the spring tension.

Workpiece unclamping

1. For unclamping a minimum pressure of 100 bar is required. In case of pressure increase at the unclamping port, the hydraulic piston returns to its off-position and the spring tension of the clamping bushing will be released. Very light workpieces can be slightly lifted.
2. Remove the workpiece.

Note:
For operating pressures < 100 bar please contact us.

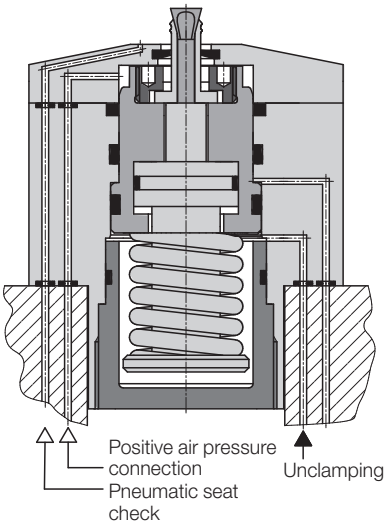

What happens in case of pressure drop of the unclamping pressure?

The clamping bushing is expanded by spring force and can only be released with the minimum unclamping pressure of 100 bar. If there is no oil pressure the workpiece can neither be taken out nor a new workpiece can be inserted.

Operating conditions, tolerances and other data, see data sheet A 0.100.